衬氟陶瓷球阀 Lined Ceramic Ball Valve

有氟密陶瓷管阀

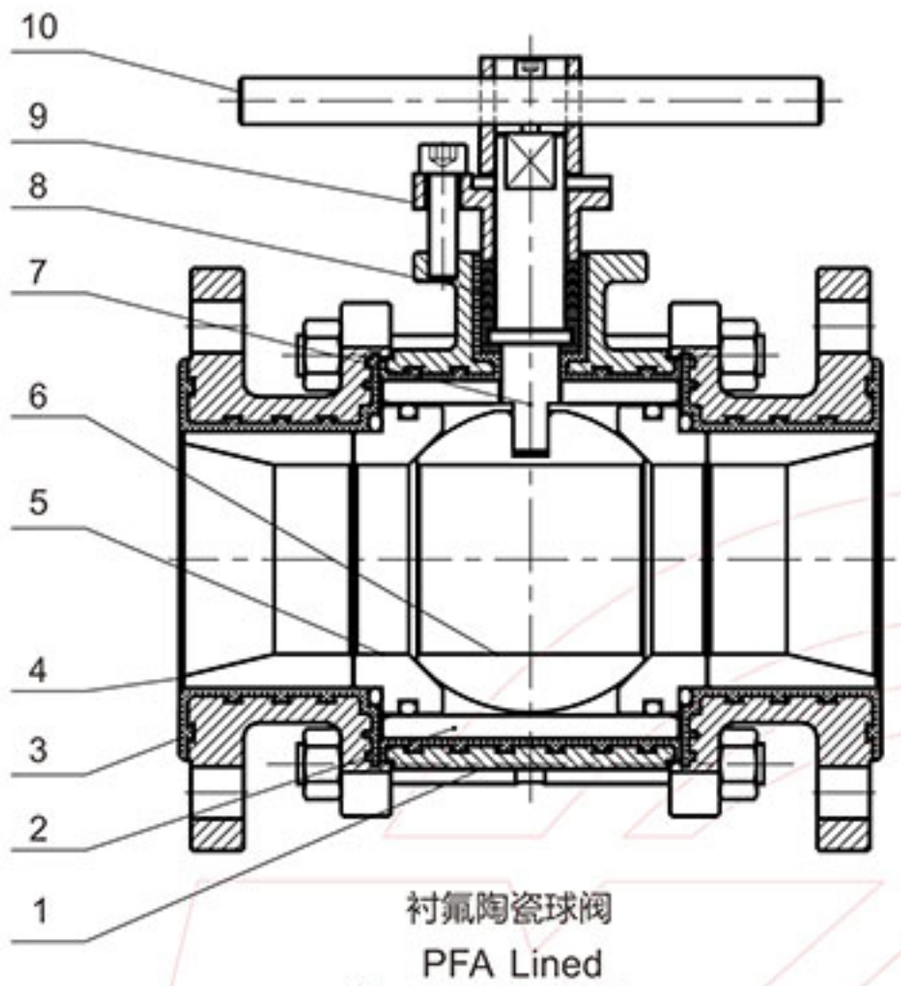

衬氟陶瓷球阀

PFA Lined
Ceramic Ball Valve

技术规范 Technical Specification

设计与制造 **Design and Manufacture**		API 6D / GB/T12237
连接端尺寸 **Connection End**	结构长度 Face-to-face Dimension	ASME B16.10 / GB/T12221
	法兰尺寸 **Flange End**	ASME B16.5 / GB/T9113
检验与试验 **Inspeection & Test**		API598 / GB/T13927
材料 **Material**	碳钢 **Carbon steel**	GB/T12229
	不锈钢 **Stainless steel**	GB/T12230
标志**Mark**		GB/T12220
供货**Delivery**		GB/T12252

主要部件材料 Material Specification

序号 **No.**	名称 **Name**	材料 **Material**
1	阀体 Body	WCB/CF8+PFA
2	中体内衬 Middle Liner	高强度结构陶瓷 High strength structural ceramic
3	阀盖 Bonnet	WCB/CF8+PFA
4	阀盖接头 Bonnet Joint	高强度结构陶瓷 High strength structural ceramic
5	阀座 Seat	高强度结构陶瓷 High strength structural ceramic
6	球体 Ball	高强度结构陶瓷 High strength structural ceramic
7	阀杆 Stem	316L/HC-276
8	组合填料环 Parking ring	PTFE/柔性石墨 Flexible graphite
9	填料压盖 Gland	WCB/CF8
10	手柄 Lever	WCB

衬氟陶瓷球阀 Lined Ceramic Ball Valve

YOUFUMI

材料明细表 Material Specification

序号 No.	名称 Name	材料明细 Material details		
1	螺母 Nut	A194 2H	A194 8	A194 8M
2	手柄 Lever	A216 WCB	A351 CF8 A351 CF8M	A351 CF3 A351 CF3M
3	定位片 Locating piece	25# SS304		
4	内六角螺钉 Hexagon Screw	A193 B7	A320 B8	A193 B8M
5	压盖 Gland	A216 WCB	A351 CF8 A351 CF8M	A351 CF3 A351 CF3M
6	填料 Packing	PTFE		
7	填料函 Stuffing Box	A216 WCB+ PFA	A351 CF8 CF8M+PFA	A351 CF3 CF3M+PFA
8	外六角螺钉 Outer hexagonal bolt	A193 B7	A320 B8	A193 B8M
9	阀体 Body	A216 WCB +PFA	A351 CF8 CF8M+PFA	A351 CF3 CF3M+PFA
10	阀座 Seat	高强度结构陶瓷 High strength structural ceramic		
11	球体 Ball	高强度结构陶瓷 High strength structural ceramic		
12	阀杆 Stem	17-4PH+PFA		
13	阀盖 Bonnet	A216 WCB+ PFA	A351 CF8 CF8M+PFA	A351 CF3 CF3M+PFA

衬氟陶瓷球阀
PFA Lined ceramic ball valve

衬氟陶瓷球阀 Lined Ceramic Ball Valve

有氟密陶瓷管阀

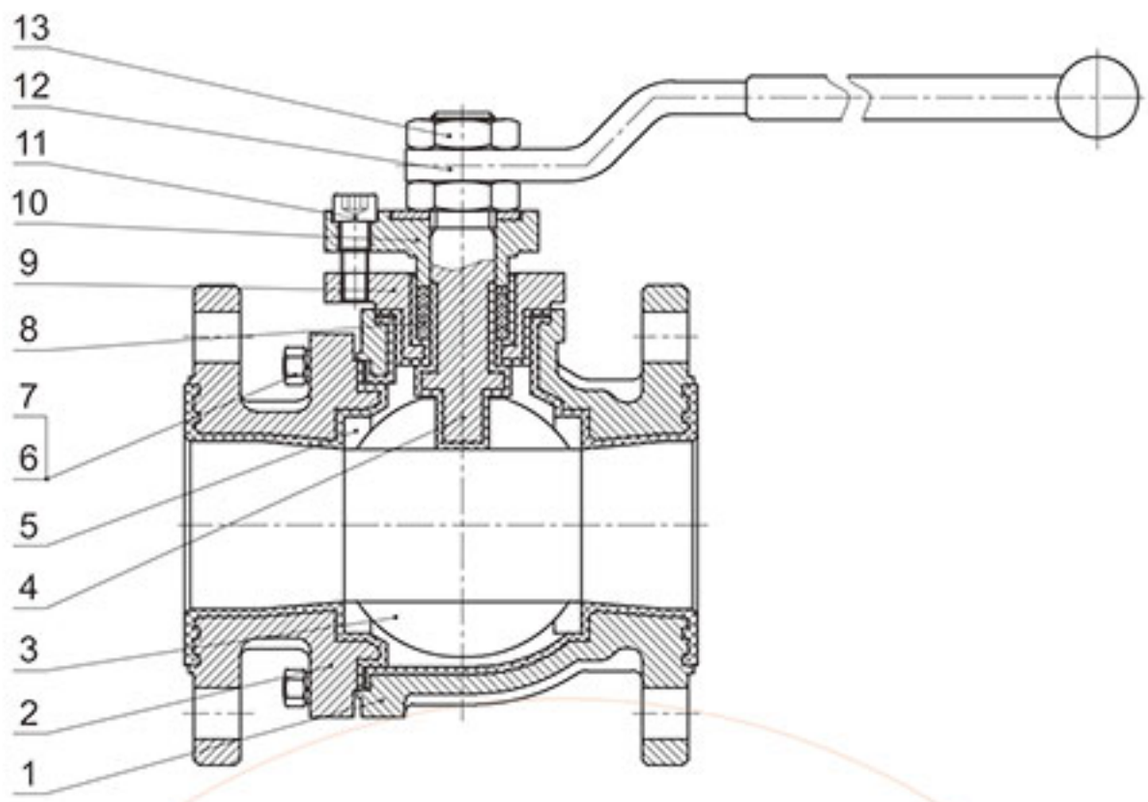

产品说明

- 耐磨陶瓷球阀是我公司最新研发的高新技术产品，是在全衬PFA球阀的基础上改进而成。结构紧凑，外形美观，适用于有软颗粒但又有腐蚀性的介质，尤其是高磨损、强腐蚀等恶劣工况。目前已广泛应用于广泛应用石油化工、医药、水处理等领域。
- 我公司生产的衬氟陶瓷球阀，球体与阀座均采用增韧氧化铝或氧化锆结构陶瓷，其化学稳定性及硬度极高 (洛氏硬度HRC88), 具有极高的耐磨损性能，且隔热性好，热膨胀小, 有高硬度及高电热绝缘，密封性能强，比普通衬氟球阀更耐磨损。与介质接触的其它部件，采用全衬PFA材料，具有很强的耐腐蚀、抗冲蚀性能, 相比与陶瓷阀门，既减轻了整体重量，又增强了阀门的耐腐蚀性能。
- 公称通径DN15~DN300, 公称压力PN10~PN40, 适应温度≤200°C, 驱动方式有手动、气动、电动等；也可根据GB, API, JIS等标准制造。

序号 No.	名称 Name	材料 Material
1	阀体 body	WCB/CF8+PFA
2	阀盖 bonnet	WCB/CF8+PFA
3	球体 ball	高强度结构陶瓷 High strength structural ceramic
4	阀杆 Stem	2Cr13/SS304
5	阀座 Seat	高强度结构陶瓷 High strength structural ceramic
6	螺柱 Bolt	A193-B7/B8
7	螺母 Nut	A194-2H/B8
8	组合填料环 Parking ring	PTFE
9	填料函 Stuffing box	WCB/CF8
10	填料压盖 Gland	WCB/CF8
11	内六角螺栓 Hexagon Screw	A193-B7/B8
12	手柄 Lever	WCB
13	锁紧螺母 Nut	A194-2H/B8

Product Description

- This type of ceramic ball valve is YFM's first developed high-tech product, featurers PFA lined body. It is compact and good surface and widely used in soft particals with corrosion medium, especially for high wear, strong corrosion and other harsh conditions. Current ceramice valve widely used in petrochemical, medicine and water treatment industries.
- The ball and seat adopts alumina or zirconia ceramic with high chemical stability and hardness (HRC88). The ceramic lined valve has a very high abrasion resistance, corrosion resistance, erosion resistance, good insulation. The wetted body is fully lined with PFA that also has good performance on corrosion resistant. Comparing to the fully lined ceramic valve, PFA lined one lower the whole weight and also more economic.
- Diameter size: DN15~DN300. Nominal pressure: PN10~PN40. Applicalbe temperature: ≤200°C. Operation methods can be manual, pneumatic, electric. Manufacture and design as per GB, API, JIS standard.

技术规范 Technical Specification

设计与制造 Design & Manufacture		API 6D / GB/T12237
连接端尺寸 Ends Standard	结构长度 Face-to-face	ASME B16.10 / GB/T12221
	法兰尺寸 Flange	ASME B16.5 / GB/T9113
检验与试验 Inspection & Test		API598 / GB/T13927
材料 Material	碳钢 Carbon steel	GB/T12229
	不锈钢 Stainless steel	GB/T12230
标志 Mark		GB/T12220
供货 Delivery		GB/T12252
口径 Size		DN15-350
压力 Pressure		1.0MPa 1.6MPa 150LB