气动衬氟隔膜阀 Lined Pneumatic Diaphragm Valve

主要参数及性能 Technical Specification

公称通径 **Nominal Diameter**	20	25	32	40	50	65	80	100	125	150	200	250	300
额定Cv值 **Rated Cv**	9.1	19.8	26.8	45	59	83	148	269	362	505	1320	2000	3624
额定行程 **Rated travel**	14mm			22mm		30mm			50mm			60mm	
实际压力 **Actual pressure**	最大1.0 MPa(1.6 MPa特制) Maxmum1.0 MPa (1.6 MPa customised)												
公称压力 **Nominal pressure**	1.0MPa, 1.6MPa												
工作温度 **Working temperature**	-29°C ~180°C												
法兰标准 **Flange connection**	HG/T 20592												
切断时间 **Cut off time**	全开或全关所用时间为2~4秒 2~4 seconds at full open/close												
流量特性 **Flow characteristic**	快开 Quick open												
	配用ZSA/B活塞式执行机构 ZSA/B piston actuator												
型号 **Model**	ZSA/B-22			ZS/B-23		ZSA/B-34			ZSA/B-45			ZSA/B-56	
作用型式 **Action mode**	ZSA型执行机构实现“气关”式动作；ZSB型执行机构实现“气开”式动作； ZSA type actuator refer to “air to close” action; ZSB type actuator refer to “air to open “ action												
供气压力 **Pressure supply**	弹簧范围：0.08~0.24、0.34~0.50、0.08~0.24 MPa； 气源压力：0. 5 MPa According to the scope of spring: 0.08~0.24, 0.34~0.50, 0.08~0.24 Mpa; air supply pressure: 0. 5 MPa												
气源接头 **Air supply connection**	Rc1/4												
基本误差 **Basic error**	不带定位器±5%；带定位器±2%； Without positioner:±5%; With positioner:±2%;												
回差 **Backlash**	不带定位器3%；带定位器2%； Without positioner: 3%; With positioner: 2%;												
死区 **Dead zone**	不带定位器3%；带定位器0.8%； Without positioner: 3%; With positioner: 0.8%;												
行程偏差 **Travel deviation**	±2.5%												
泄漏量 **Leakage rate**	不超过阀门额定Cv值的10^{-5} No more than 10^{-5} of rated CV												
选购附件 **Optional accessories**	定位器、空气过滤压器、电磁阀、限位开关等等(按订货要求配套提供) positioner, air set, solenoid valve, limit switch etc. (according to the order)												

气动衬氟隔膜阀 Lined Pneumatic Diaphragm Valve

YOUFUMI

气动衬氟隔膜阀的温度与压力关系
Temperature-Pressure Curve

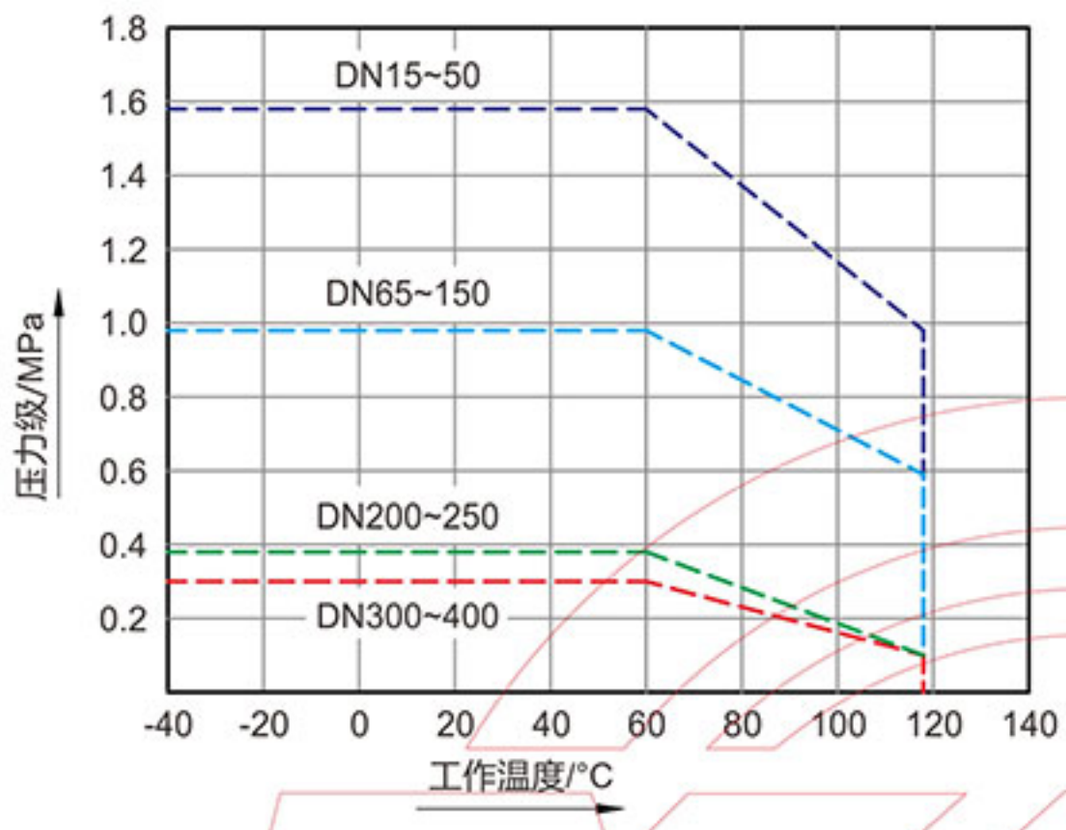

典型固有流量特性曲线
Classic Fixed Flow Characteristic Curve

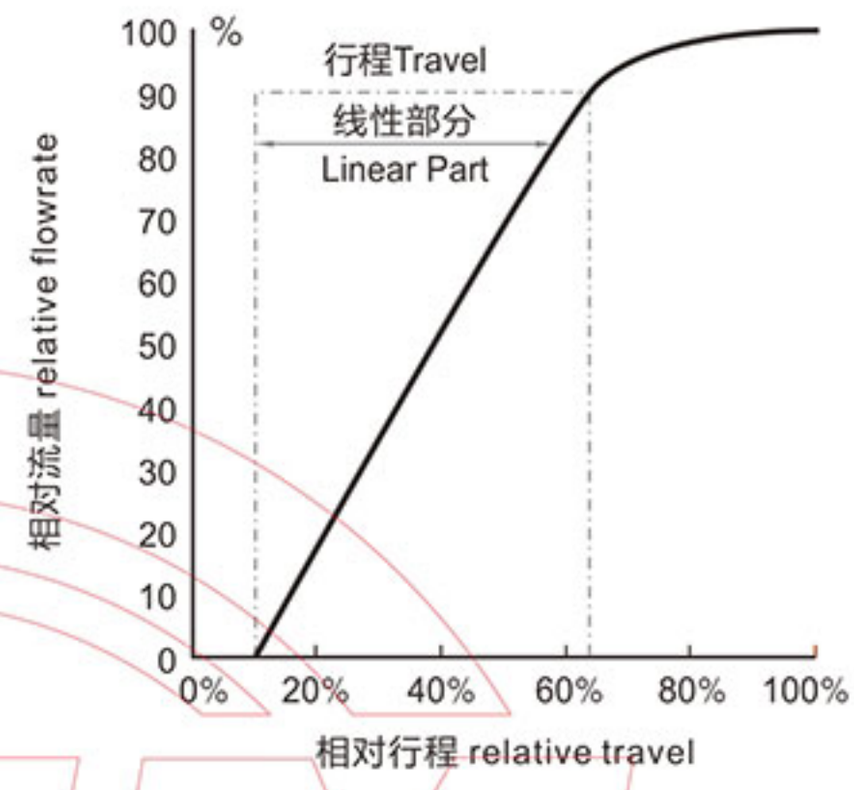

结构与工作原理

- 当信号压力输入薄膜室(活塞室)后，此压力在薄膜(活塞)上产生推力，使弹簧组压缩，同时与推杆相连的阀杆、 阀芯和隔膜做相应的移动，直至推力与弹簧组被压缩的反作用力相平衡为止，此时推杆不移动，并保持在某一位置上，因而实现调节过程控制。另外活塞推力将阀门开启或关闭两位动作，也实现了快开切断阀的控制。

Structure and working principle

- When the signal pressure input into diaphragm chamber(piston chamber),the pressure on the diaphragm (piston)generate the thrust, making the spring compressed,at the same time the valve stem,disc, diaphragm connected to push rod will move accordingly, until the thrust and the reaction force of the spring is balanced.At this time the push rod is not moving,and keep in a certain position,thus to realize the adjusting function.On the other hand,the pistons thrust will open or close the valve,also realize quick on-off valve function.

安装与维修

- 产品使用的环境温度为-29°C~70°C。因为气动薄膜片和活塞的橡胶零件，在过低温度下易硬化变脆，高温时会加速老化。
- 产品最好正立安装。如安装位置不允许，也可与垂直线成一角度。倾斜安装时，应考虑加设支撑架。
- 手轮机构使用后，必须将伸缩套管恢复到上端(与豁口板靠近位置)，否则会影响自动控制。
- 衬氟隔膜阀安装在管道上之前，应彻底清洗管道系统的杂质和污物，以免衬氟隔膜阀运行部件卡死，或损坏阀座、阀芯密封面等重要零件。
- 衬氟隔膜阀安装时，介质流向应与调节阀箭头方向一致。

Installation and Maintenance

- The applicable temperature for lined diaphragm control valve is -29°C~70°C. Since the pneumatic diaphragm and piston are rubber parts, they are easily hardening and brittle under low temperature, and aging accelerates under high temperature.
- This valve is better for vertical installation; if not allowed, consider adding the support bracket for slanting installation.
- After hand wheel actuator used, the telescopic pipe should be returned to top end, or will affect automatic control.
- On-off valve before installed to pipeline, should clean the impurities and dirt, to avoid the running parts stuck, or damage the important parts of seat and disc sealing face.
- When the on-off valve installed, the direction of medium flow should be same as shown on control valve.

气动衬氟隔膜阀 Lined Pneumatic Diaphragm Valve

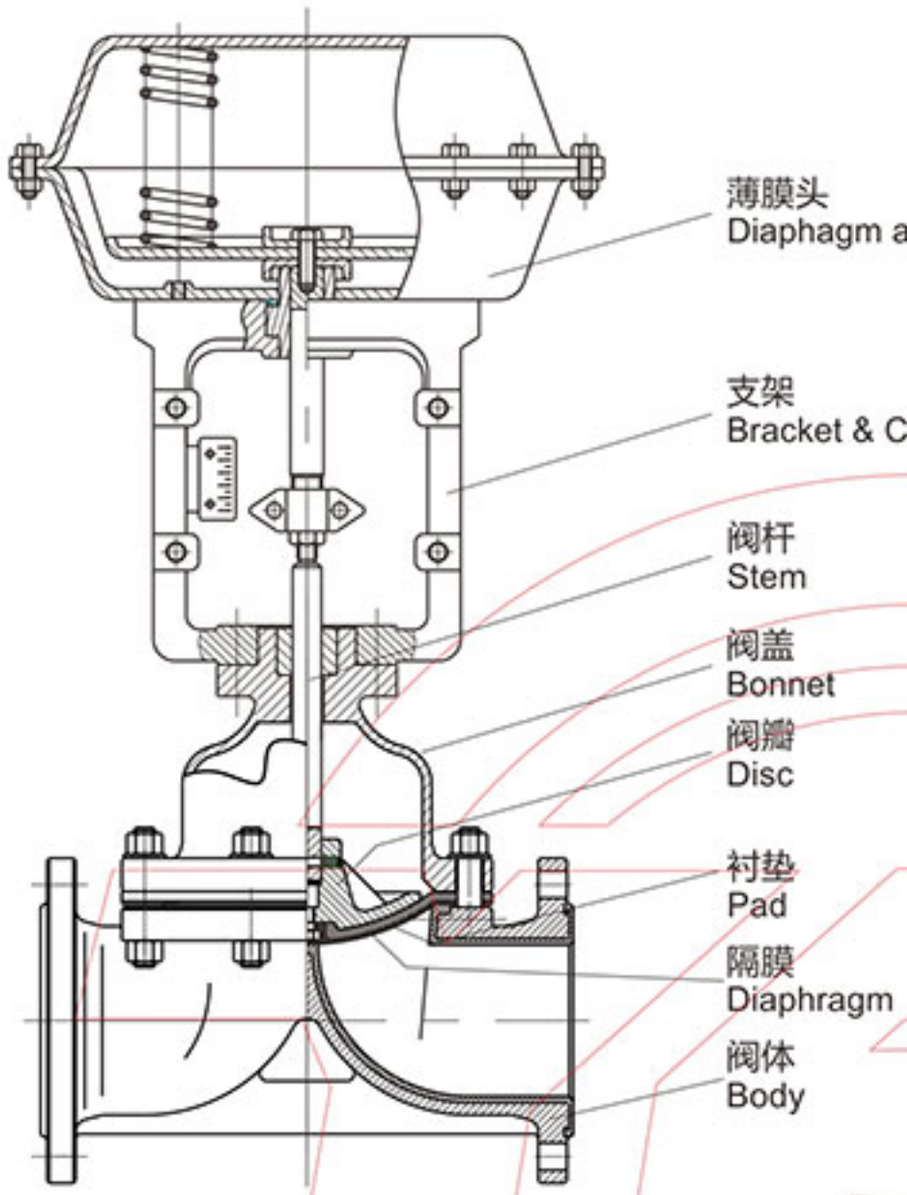

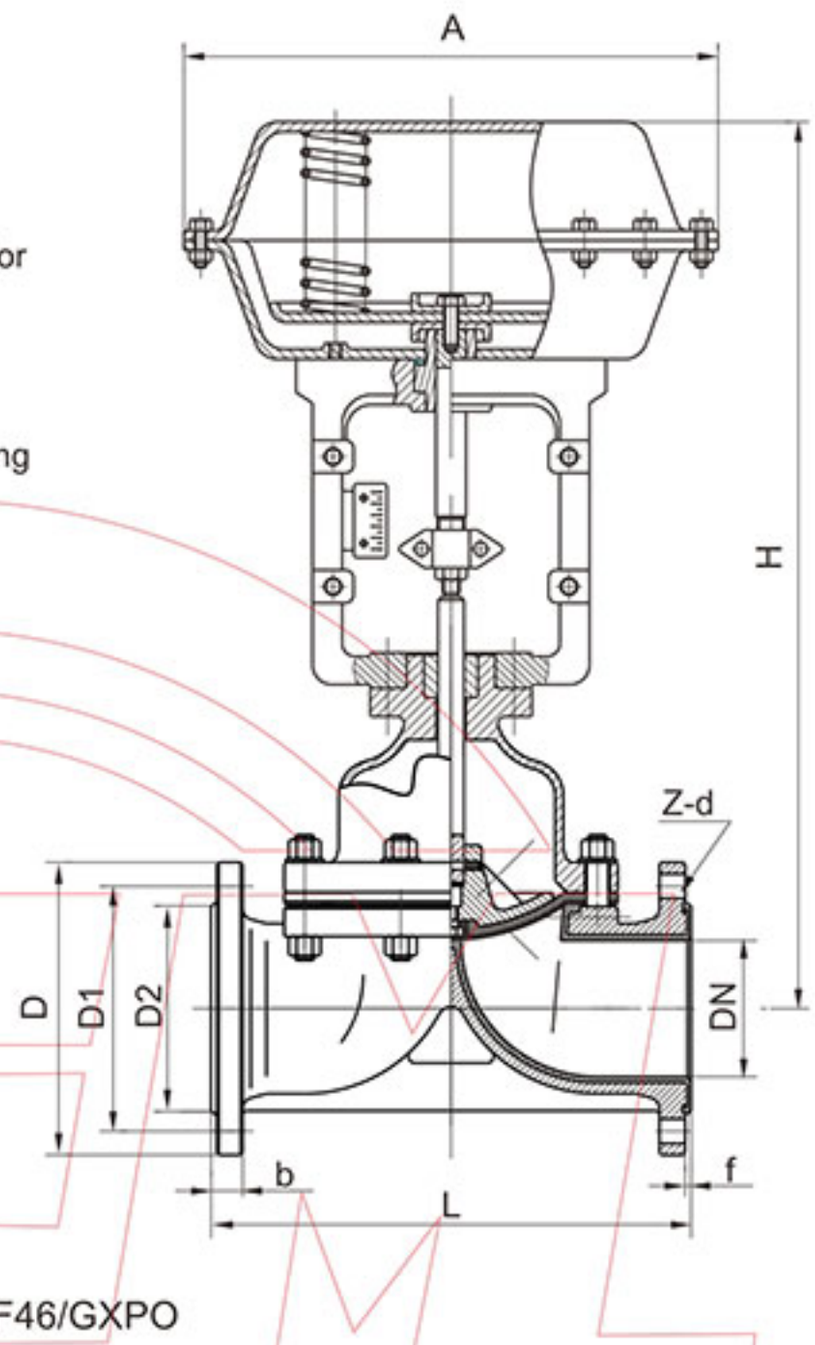

YFM-G641PFA/F4/F46/GXPO

HG/T 20592 PN10

单位Unit:mm

DN	L	D	D2	D1	f	b	Z-d	螺纹 Thread	H	A
20	135	105	75	55	2	14	4-14	M12	410	250
25	145	115	85	65	2	14	4-14	M12	424	250
32	160	140	100	78	2	16	4-18	M16	430	250
40	180	150	110	85	3	16	4-18	M16	465	285
50	210	165	125	100	3	16	4-18	M16	475	285
65	250	185	145	120	3	18	4-18	M16	580	360
80	300	200	160	135	3	20	8-18	M16	603	360
100	350	220	180	155	3	20	8-18	M16	622	360
125	400	250	210	185	3	22	8-18	M16	759	470
150	460	285	240	210	3	24	8-22	M20	774	470
200	570	340	295	265	3	26	8-22	M20	814	470
250	680	395	350	320	3	30	12-22	M20	1112	580
300	790	445	400	368	4	30	12-22	M20	1174	580

注：更多尺寸，请联系有氟密工程师。 Note: For more size, please consult our engineer.