REDUCED BORE TRUNNION BALL VALVES

BASIC CONFIGURATION

ASME INTEGRAL FLANGED AND WELDING ENDS

WORKING PRESSURE RATING	SIZE NPS	SIZE DN	STANDARD DESIGN TYPE	A-RF mm	A-RF in	A-RJ mm	A-RJ in	A-BW mm	A-BW in	B mm	B in	B1 mm	B1 in	C mm	C in	H mm	H in	WEIGHT kg	WEIGHT lb	FIGURE
ASME 150 (SEE NOTE 1)	1/2"	15	1TL	165(1)	6.50(1)	N.A.	N.A.	165(1)	6.50(1)	13	0.51	13	0.51	198	7.8	268	10.6	9	20	L1 B03
	3/4"	20	1TL	191(1)	7.50(1)	N.A.	N.A.	191(1)	7.50(1)	13	0.51	19	0.75	198	7.8	268	10.6	10	22	L1 B04
	1"	25	1TL	216(1)	8.50(1)	216(1)	8.50(1)	216(1)	8.50(1)	19	0.75	25	0.98	198	7.8	273	10.7	11	24	L1 B05
	1-1/2"	40	1TL	241(1)	9.50(1)	241(1)	9.50(1)	241(1)	9.50(1)	25	0.98	38	1.50	263	10.4	286	11.3	15	34	L1 B07
	2"	50	1TL	292(1)	11.50(1)	295(1)	11.62(1)	292(1)	11.50(1)	38	1.50	50	1.97	363	14.3	342	13.5	27	59	L1 B08
	3"	80	1TL	356(1)	14.00(1)	359(1)	14.12(1)	356(1)	14.00(1)	50	1.97	75	2.95	363	14.3	273	10.7	38	84	L1 B10
	4"	100	1TL	432(1)	17.00(1)	435(1)	17.12(1)	432(1)	17.00(1)	75	2.95	101	3.98	453	17.8	321	12.6	61	135	L1 B11
	6"	150	1TG	559(1)	22.00(1)	562(1)	22.12(1)	559(1)	22.00(1)	101	3.98	151	5.94	300	11.8	389	15.3	168	370	L1 B13
	8"	200	1TG	660(1)	26.00(1)	663(1)	26.12(1)	660(1)	26.00(1)	151	5.94	202	7.95	400	15.7	402	15.8	290	639	L1 B14
	10"	250	1TG	787(1)	31.00(1)	790(1)	31.12(1)	787(1)	31.00(1)	202	7.95	253	9.96	500	19.7	446	17.6	426	940	L1 B15
	12"	300	1TG	838(1)	33.00(1)	841(1)	33.12(1)	838(1)	33.00(1)	253	9.96	304	11.97	600	23.6	494	19.4	651	1436	L1 B16
	14"	350	1TG	889(1)	35.00(1)	892(1)	35.12(1)	889(1)	35.00(1)	304	11.97	335	13.19	600	23.6	499	19.7	814	1795	L1 B17
	16"	400	1TG	991(1)	39.00(1)	994(1)	39.12(1)	991(1)	39.00(1)	335	13.19	386	15.20	600	23.6	564	22.2	1208	2663	L1 B18
	18"	450	1TG	1092(1)	43.00(1)	1095(1)	43.12(1)	1092(1)	43.00(1)	386	15.20	437	17.20	800	31.5	606	23.9	1463	3225	L1 B19
	20"	500	1TG	1194(1)	47.00(1)	1200(1)	47.25(1)	1194(1)	47.00(1)	437	17.20	488	19.21	800	31.5	604	23.8	2100	4630	L1 B20
	22"	550	1TG	1295(1)	51.00(1)	1305(1)	51.38(1)	1295(1)	51.00(1)	488	19.21	539	21.22	800	31.5	664	26.2	2730	6019	L1 B22
	24"	600	1TG	1397(1)	55.00(1)	1407(1)	55.38(1)	1397(1)	55.00(1)	539	21.22	590	23.23	800	31.5	724	28.5	3360	7408	L1 B24
ASME 300 (SEE NOTE 1)	1/2"	15	1TL	165(1)	6.50(1)	163(1)	6.44(1)	165(1)	6.50(1)	13	0.51	13	0.51	198	7.8	268	10.6	10	23	L3 B03
	3/4"	20	1TL	191(1)	7.50(1)	191(1)	7.50(1)	191(1)	7.50(1)	13	0.51	19	0.75	198	7.8	268	10.6	12	27	L3 B04
	1"	25	1TL	216(1)	8.50(1)	216(1)	8.50(1)	216(1)	8.50(1)	19	0.75	25	0.98	198	7.8	273	10.7	16	35	L3 B05
	1-1/2"	40	1TL	241(1)	9.50(1)	241(1)	9.50(1)	241(1)	9.50(1)	25	0.98	38	1.50	263	10.4	286	11.3	21	47	L3 B07
	2"	50	1TL	292(1)	11.50(1)	295(1)	11.62(1)	292(1)	11.50(1)	38	1.50	50	1.97	363	14.3	342	13.5	30	66	L3 B08
	3"	80	1TL	356(1)	14.00(1)	359(1)	14.12(1)	356(1)	14.00(1)	50	1.97	75	2.95	363	14.3	273	10.7	50	110	L3 B10
	4"	100	1TL	432(1)	17.00(1)	435(1)	17.12(1)	432(1)	17.00(1)	75	2.95	101	3.98	453	17.8	321	12.6	83	184	L3 B11
	6"	150	1TG	559(1)	22.00(1)	562(1)	22.12(1)	559(1)	22.00(1)	101	3.98	151	5.94	300	11.8	389	15.3	225	497	L3 B13
	8"	200	1TG	660(1)	26.00(1)	663(1)	26.12(1)	660(1)	26.00(1)	151	5.94	202	7.95	500	19.7	402	15.8	345	759	L3 B14
	10"	250	1TG	787(1)	31.00(1)	790(1)	31.12(1)	787(1)	31.00(1)	202	7.95	253	9.96	500	19.7	446	17.6	543	1198	L3 B15
	12"	300	1TG	838(1)	33.00(1)	841(1)	33.12(1)	838(1)	33.00(1)	253	9.96	304	11.97	600	23.6	497	19.6	780	1720	L3 B16
	14"	350	1TG	889(1)	35.00(1)	892(1)	35.12(1)	889(1)	35.00(1)	304	11.97	335	13.19	600	23.6	516	20.3	988	2178	L3 B17
	16"	400	1TG	991(1)	39.00(1)	994(1)	39.12(1)	991(1)	39.00(1)	335	13.19	386	15.20	800	31.5	570	22.4	1430	3153	L3 B18
	18"	450	1TG	1092(1)	43.00(1)	1095(1)	43.12(1)	1092(1)	43.00(1)	386	15.20	437	17.20	800	31.5	624	24.6	1925	4244	L3 B19
	20"	500	1TG	1194(1)	47.00(1)	1200(1)	47.25(1)	1194(1)	47.00(1)	437	17.20	488	19.21	800	31.5	627	24.7	2468	5440	L3 B20
	22"	550	1TG	1295(1)	51.00(1)	1305(1)	51.38(1)	1295(1)	51.00(1)	488	19.21	539	21.22	800	31.5	682	26.9	3255	7176	L3 B22
	24"	600	1TG	1397(1)	55.00(1)	1407(1)	55.38(1)	1397(1)	55.00(1)	539	21.22	590	23.23	800	31.5	737	29.0	4253	9375	L3 B24

BFE reserves the right to change designs, dimensions or specifications without notice.

PRODUCT FEATURES:

- *Standard O-Rings in Viton with AED properties.*

NOTE 1: Face-to-Face acc.to ASME B16.10 related to class 600.

DESIGN TYPE 1TL

- **ONE PIECE BODY**
- **BODY-BONNET BOLTED JOINT TYPE**
- **LEVER OPERATOR**

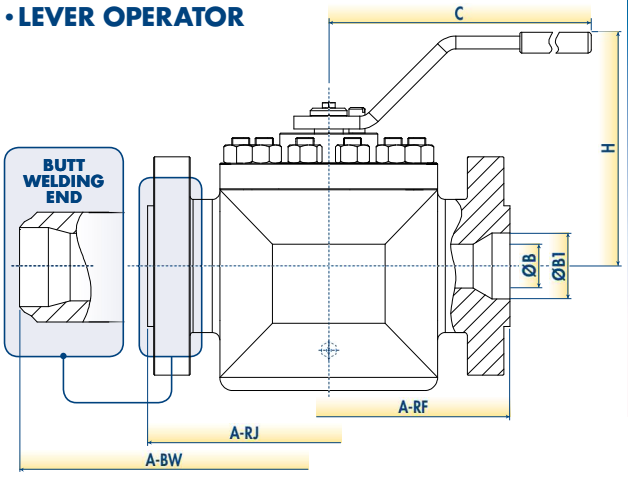

DESIGN TYPE 1TG
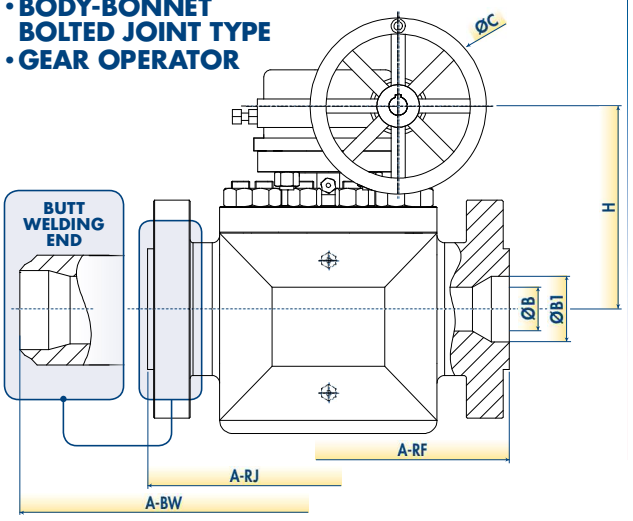
- **ONE PIECE BODY**
- **BODY-BONNET BOLTED JOINT TYPE**
- **GEAR OPERATOR**